zadaci 7 — 10. video

Primjer 6.3.)

$r_{CE} \to \infty$

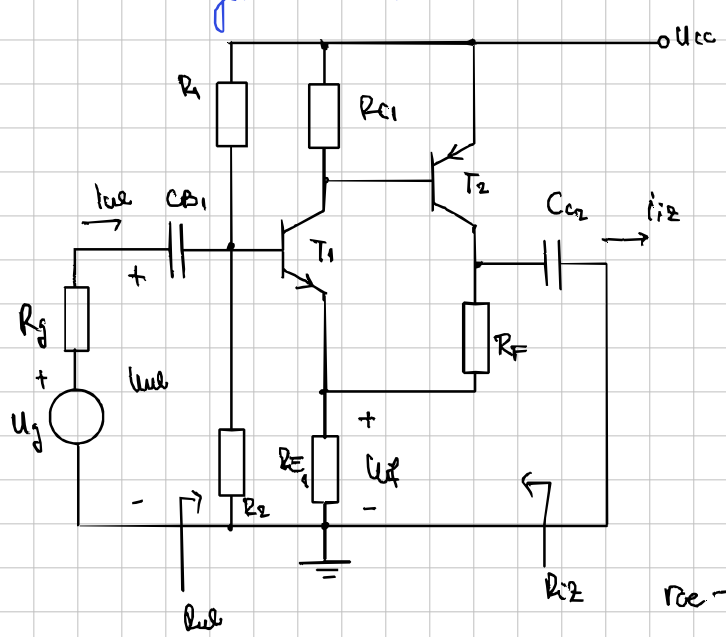

* cijela blok shema i ne ono što smo radili na modelima pojačala
⟹ vrijedi za linearni rotator
↳ ta analiza vrijedi za ANALIZU u DINAMICI (za mali AC signal)

↳ nedovršavamo jednostavnim za mali AC signal

$r_{CE} \to \infty$, $U_T = 25mV$

$U_{CC} = 15V$ $R_1 = 360\Omega$ $R_{C1} = 1{,}4k\Omega$ $R_F = 4{,}5k\Omega$ $\beta \approx h_{fe} = 100$

$R_g = 500\Omega$ $R_2 = 40k\Omega$ $R_{E1} = 500\Omega$ $R_L = 5k\Omega$ $U_\gamma = 0.7V$

STATIKA

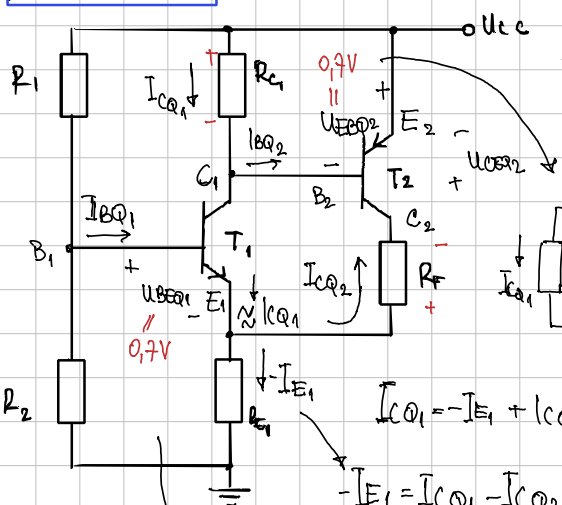

→ ako zanemarimo I_{BQ2} (što možemo jer je puno manji)

⟹ $I_{CQ1} = I_{RC1}$

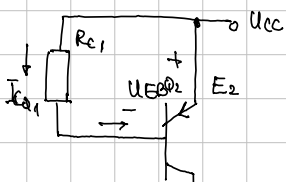

$I_{CQ1} \cdot R_{C1} - U_{EBQ2} = 0$

$$I_{CQ1} = \frac{0.7V}{R_{C1}}$$

$$I_{CQ1} = 0{,}5mA$$

$I_{CQ1} = -I_{E1} + I_{CQ2}$

$-I_{E1} = I_{CQ1} - I_{CQ2}$ → $U_{EQ1} = -I_{E1} \cdot R_{E1}$

$U_{EQ1} = R_{E1}(I_{CQ1} - I_{CQ2})$

Ulazni krug T_1:

$U_{BB_1} = \frac{R_2}{R_1 + R_2} \cdot U_{CC}$ → $U_{BB_1} = 1.5V$

$R_B = 36k\Omega$

$I_{BQ1} = \frac{I_{CQ1}}{\beta}$

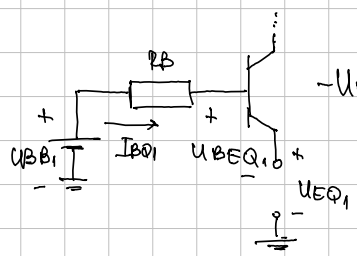

$-U_{BB_1} + I_{BQ1} \cdot R_B + U_{BEQ1} + U_{EQ1} = 0$

$$U_{BB_1} - U_{BEQ1} = \frac{I_{CQ1}}{\beta} \cdot R_B + R_{E1}(I_{CQ1} - I_{CQ2})$$

$$U_{BB_1} - U_{BEQ1} = I_{CQ1}\left(\frac{R_B}{\beta} + R_{E1}\right) - R_{E1} \cdot I_{CQ2}$$

$$I_{CQ2} = \left[I_{CQ1}\left(\frac{R_B}{\beta} + R_{E1}\right) - U_{BB_1} + U_{BEQ1}\right] \cdot \frac{1}{R_{E1}} \longrightarrow I_{CQ2} = -0.74mA$$

↳ $U_{EQ1} = 0.62V$

$-U_{CC} + R_{C1} \cdot I_{CQ1} + U_{CEQ1} + U_{EQ1} = 0$

↳ $U_{CEQ1} = U_{CC} - R_C \cdot I_{CQ1} - U_{EQ1} = \dots \Rightarrow \boxed{U_{CEQ1} = 13.68V}$

$-U_{CC} + U_{CQ2} = U_{CEQ2} = -I_{CQ2} \cdot R_F + U_{EQ1} - U_{CC} = \boxed{-10.7V}$

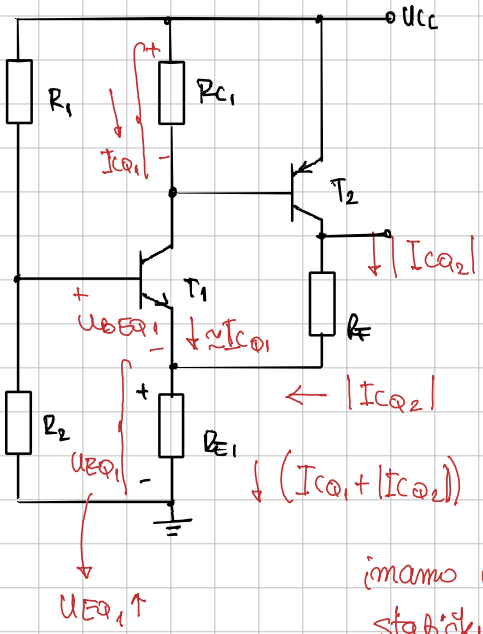

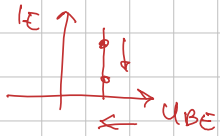

$I_{CQ2}\uparrow$

$\downarrow$

$|U_{EQ1}|\uparrow \Rightarrow U_{BEQ1}\downarrow \Rightarrow I_{CQ1}\downarrow$

$I_{CQ1}\downarrow \Rightarrow (I_{CQ1}\cdot R_{C1})\downarrow$

$\Downarrow$

$U_{EQ2}\downarrow \Rightarrow I_{CQ2}\downarrow$

imamo interni mehanizam koji stabilizira statičku radnu točku

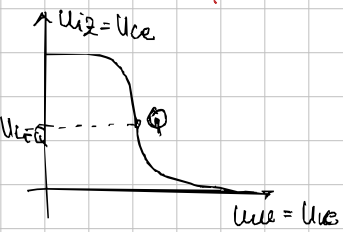

▶ pri korištenju P.V → stabiliziramo SRT

Dinamički parametri

$$r_{be_1}=\frac{U_T}{I_{BQ1}}=\frac{U_T\cdot\beta}{I_{CQ1}} \longrightarrow r_{be_1}=5k\,\Omega$$

$$r_{be_2}=\frac{U_T}{I_{BQ2}}=\frac{U_T\cdot\beta}{I_{CQ2}} \longrightarrow r_{be_2}=3{,}38k\,\Omega$$

Dinamika (dinamička nadomjesna shema)

pojačanje β

pojačanje A

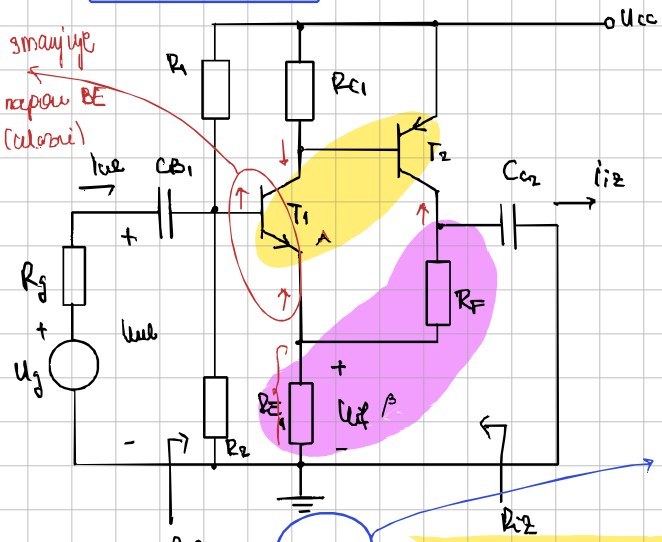

otpor kojeg modificira PV.

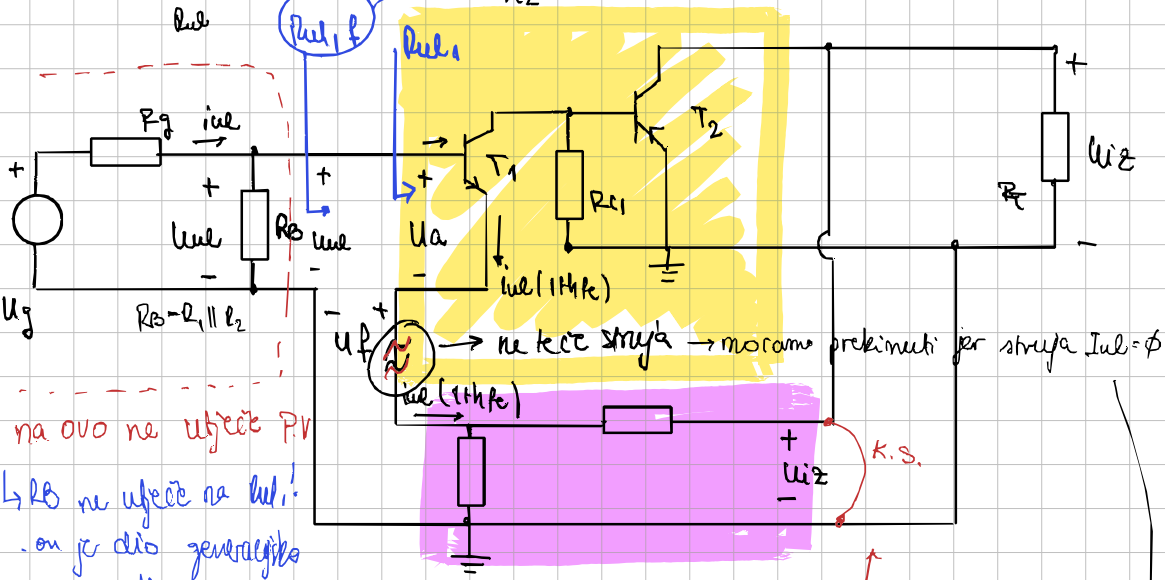

na ovo ne utječe PV

↳ RB ne utječe na Rul!

. on je dio generatorske petlje

Na izlazu mjerimo uiz → NAPONSKA

na ulazu zbrajamo napone → SERIJSKA

} NAPONSKA - SERIJSKA

---

uvjet za određivanje ul. kruga: uiz = 0

—||— izl. kruga: iul = 0

* to možemo vidjeti na prostoj skici posljedica P.H.

* uvjet za određivanje ul. kruga: $u_{iz} = 0$

dio generatora —||— izl. kruga: $i_{izl} = 0$

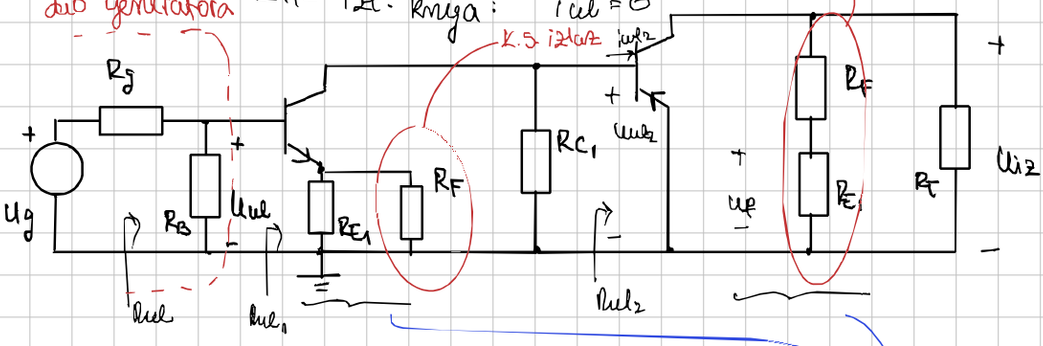

Osnovno pojačalo s uvedenim opterećenjima β-grane

to je sve što ćemo dobiti od β-grane

* prati stupac iz tablice!

$$A_v = \frac{u_{iz}}{u_{ul}} = \frac{u_{iz}}{u_{ul1}} \cdot \frac{u_{ul2}}{u_{ul1}} = A_{v1} \cdot A_{v2}$$

$$R_{ul2} = \frac{u_{ul2}}{i_{ul2}} = r_{be2} = 3.38\,k\Omega$$

opterećenje β-grane

$$A_{v2} = \frac{u_{ul2}}{u_{ul1}} = -h_{fe2} \cdot \frac{R_T \| (R_F + R_{E1})}{r_{be2}} = -74$$

$$R_{ul1} = r_{be1} + (R_{E1} \| R_F) \cdot (1 + h_{fe1}) = \dots = 90.5\,k\Omega$$

$$\boxed{A_v = 145}$$

$$A_{v2} = \frac{u_{iz}}{u_{ul2}} = \frac{-h_{fe}(R_{C1} \| R_{ul2})}{r_{be1} + (1 + h_{fe})(R_{E1} \| R_F)} \approx \frac{-R_{C1} \| R_{ul2}}{R_{E1} \| R_F} = -1.96$$

$$\beta = \frac{u_f}{u_{iz}} = \frac{R_{E1}}{R_{E1} + R_F} = \frac{1}{10}$$

$$F = 1 + \beta A_v$$

$$A_{vf} = \frac{A_v}{1 + \beta A_v} = \frac{145}{1 + 14.5} \rightarrow \boxed{A_{vf} = 9.35}$$

$\left(\frac{1}{\beta}\right)$

$\beta A_v \rightarrow$ pojačanje u petlji P.V.

$$R_{ulf} = R_{ul}(1 + \beta A_v)$$

to je onaj koji gleda u bazu tranz $\rightarrow R_{ul1}$

$$R_{ul1f} = R_{ul1}(1 + \beta A_v)$$

$$\boxed{R_{ulf} = \dots = 783\,k\Omega}$$

$$R_{ulf} = \underbrace{R_B}_{\text{na njega ne utječe P.V}} \| \underbrace{R_{ul1f}}_{\text{modificira ga P.V}} \Rightarrow \boxed{R_{ulf} = 34.4\,k\Omega}$$

$R_{iz} \rightarrow$ * moramo odspojiti R_T $\longrightarrow \boxed{R_{iz} = R_F + R_{E1} = 5\,k\Omega}$

(treba za R_{izf})

$$A_v' = A_v\big|_{R_T = \infty} \quad (\text{mijenja se } A_{v2}) = A_{v1} \cdot \frac{-h_{fe}(R_{E1} + R_F)}{\underset{r_{be1}}{R_{ul2}}} = -1.96 \cdot (-1.48)$$

$A_v' = 290$ pojačanje neopterećenog poj je 2x veće od opterećenog

$$R_{izf} = \frac{R_{iz}}{1 + \beta A_v'} = \frac{5 \times 10^3}{1 + 0.1 \cdot 290} \rightarrow \boxed{R_{izf} = 167\,\Omega}$$

$$A_{If} = \frac{i_{iz}}{i_{ul}} = \frac{\frac{u_{iz}}{R_T}}{\frac{u_{ul}}{R_{ulf}}} = A_{vf} \cdot \frac{R_{ulf}}{R_T} \rightarrow \boxed{A_{If} = 64.3}$$

Primjer 6.4.)

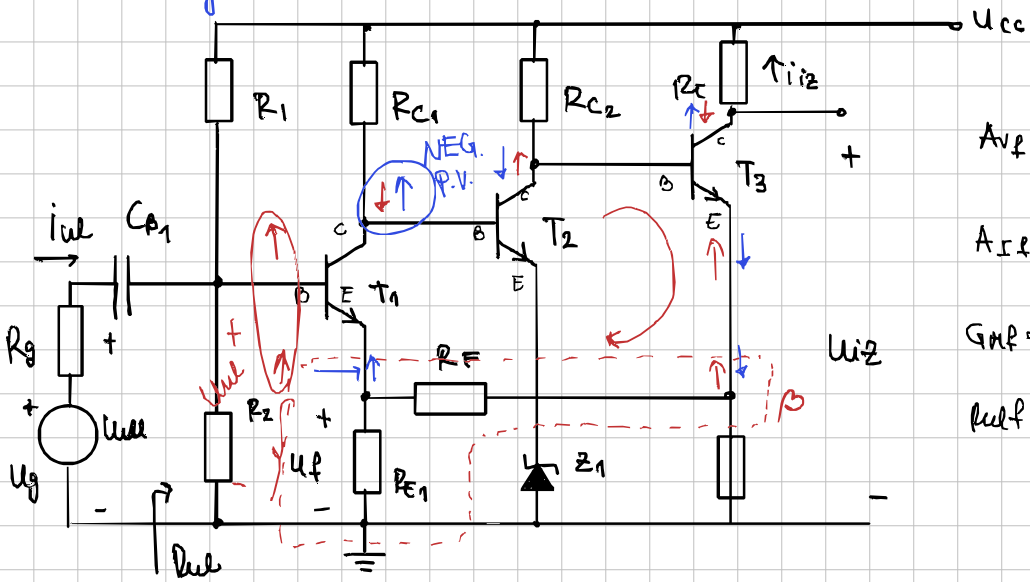

$A_{vf} = \frac{u_{iz}}{u_{ul}} = ?$

$A_{If} = \frac{i_{iz}}{i_{ul}} = ?$

$G_{mf} = \frac{i_{iz}}{u_{ul}}$

$R_{ulf} = ?$

$U_{cc} = 12V$ $R_g = 500\Omega$ $R_1 = 150k\Omega$ $R_{c1} = 6k\Omega$ $R_{c2} = 4k\Omega$ $R_{E3} = 500\Omega$

$R_2 = 25k\Omega$ $R_{E1} = 500\Omega$ $R_F = 20k\Omega$ $R_t = 500\Omega$

$\beta \approx h_{fe} = 100$ $U_\gamma = 0{,}7V$ $U_z = 3{,}5V$ $r_z = 10\Omega$ $U_T = 25mV$

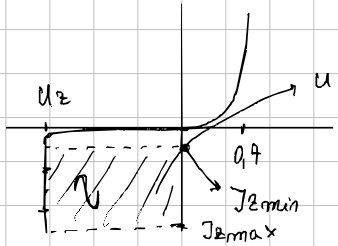

u tom području smijemo koristiti diodu

$r_d = \frac{\Delta u}{\Delta i} \ll r_z = 10\Omega$

STATIKA

U_{CEQ2}? valjda ste ne!

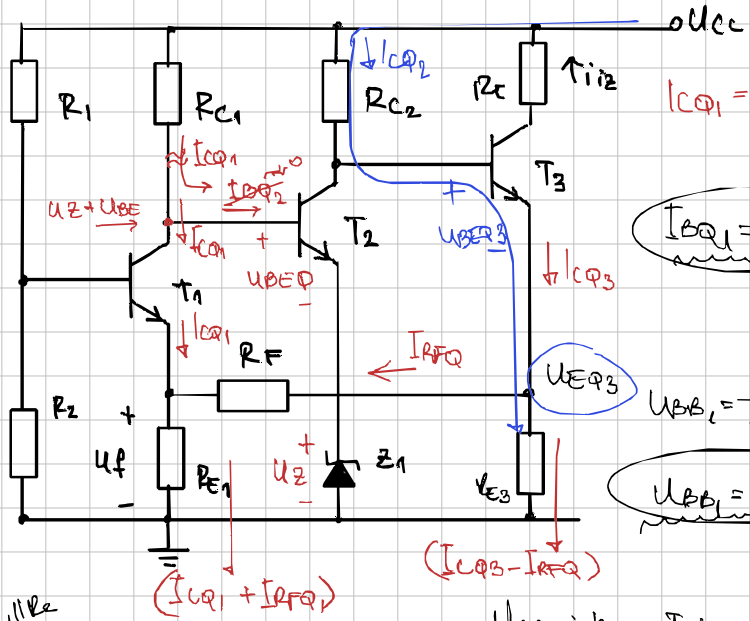

$U_{EQ1} = U_Z + U_{BEQ} = 3.5 + 0{,}7 = 4.2\,V$

$I_{CQ1} = \frac{U_{CC} - U_{EQ1}}{R_{C1}} = 1.3\,mA$

$I_{BQ1} = 13\,\mu A$

$U_{BB1} = \frac{R_2}{R_1 + R_2} \cdot U_{CC}$

$U_{BB1} = 1.71\,V$ $\quad R_B = 21.43\,k\Omega$

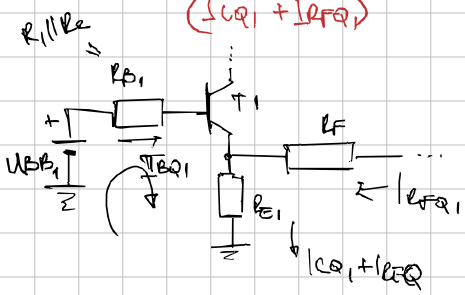

Ulazni krug T_1:

$$-U_{BB1} + R_{B1} \cdot I_{BQ1} + R_{E1}(I_{CQ1} + I_{RFQ}) + U_{BEQ} = 0$$

?

$I_{RFQ} = 1.63 \times 10^{-4}\,A$

$I_{RFQ} = 163\,\mu A$

Drugi parametri

$U_{EQ3} - \phi = I_x \cdot R_{E3}$ $\qquad U_{EQ3} = U_{EQ1}$ (ne znam često)

$U_{EQ3} = (I_{CQ3} - I_{RFQ}) \cdot R_{E3} = \dots \Rightarrow I_{CQ3} = 8.56\,mA$

$-U_{CC} + I_{CQ2} R_{C2} + U_{BEQ3} + U_{EQ3} = 0 \Rightarrow I_{CQ2} = \dots = 1.78\,mA$

$-U_{CC} + R_{C1} \cdot I_{CQ1} + U_{CEQ1} + \overbrace{R_{E1}(I_{CQ1} + I_{RFQ})}^{U_{E1}} = 0 \rightarrow U_{CEQ1} = 3.47\,V$

$-U_{CC} + R_{C2} \cdot I_{CQ2} + U_{CEQ2} + U_Z = 0 \rightarrow U_{CEQ2} = 1.38\,V$

$-U_{CC} + R_T \cdot I_{CQ3} + U_{CEQ3} + \underbrace{U_{EQ3}}_{R_{E3}(I_{CQ3} - I_{RFQ})} = 0 \rightarrow U_{CEQ3} = 3.52\,V$

Dinamički parametri

$r_{be_1} = \frac{U_T}{I_{BQ_1}}$ $\boxed{r_{be_1} = 1923\,\Omega}$

$r_{be_2} = \frac{U_T}{I_{BQ_2}}$ $\boxed{r_{be_2} = 1404\,\Omega}$

$r_{be_3} = \frac{U_T}{I_{BQ_3}}$ $\boxed{r_{be_3} = 292\,\Omega}$

DINAMIKA

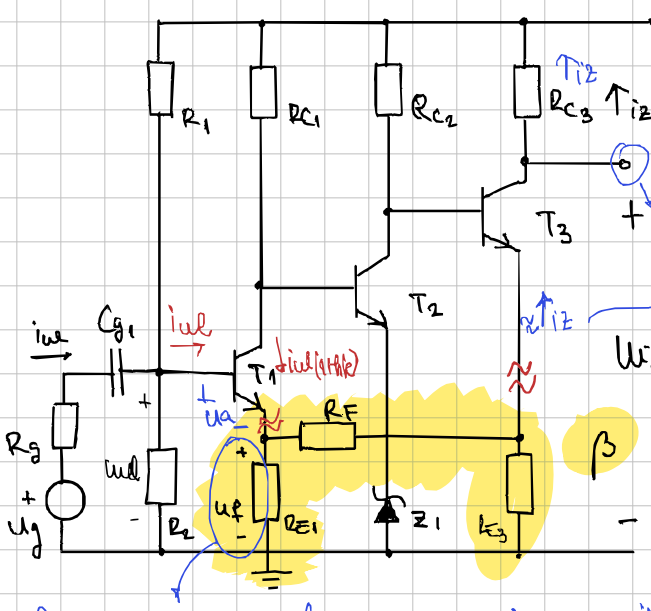

tip povratne veze?

spojeno u serriju s potrošačem

* načini mjerenja struje
→ iz teče preko nekog poznatog otpornika

→ mjerimo Iiz → STRUJNA VEZA

β grana vraća uf i tj napon je u serriji sa Uul, međusobno se oduzimaju i stvaraju napon ua → napon koji je ulaz u A-granu

⟹ SERIJSKA

⟹ STRUJNO-SERIJSKA

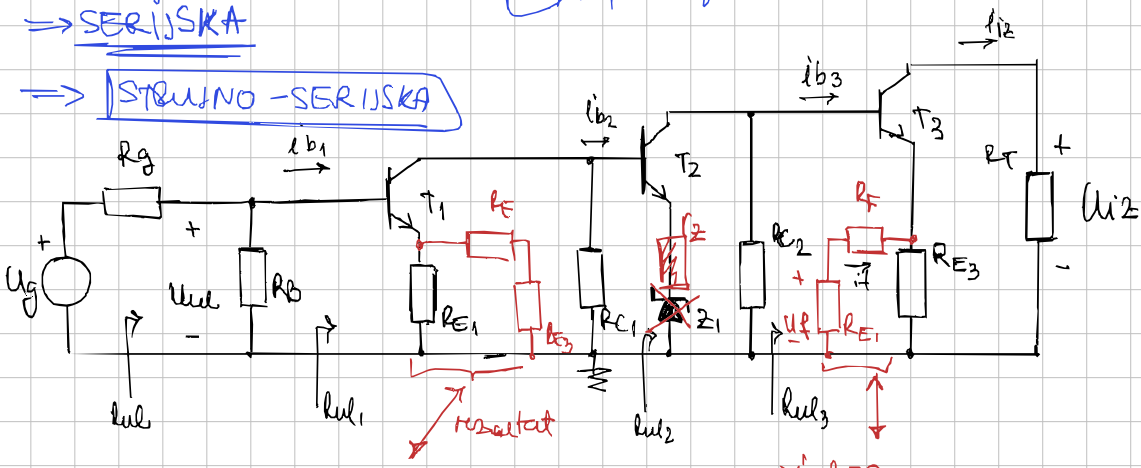

→ serijske veze prekidamo
odredivanje ULAZNOG kruga

→ iul = 0
odredivanje IZLAZNOG KRUGA

↳ pojačalo u A grani uz opterećenje β-grane

! prati Šalebahler → tim redoslijedom računaj

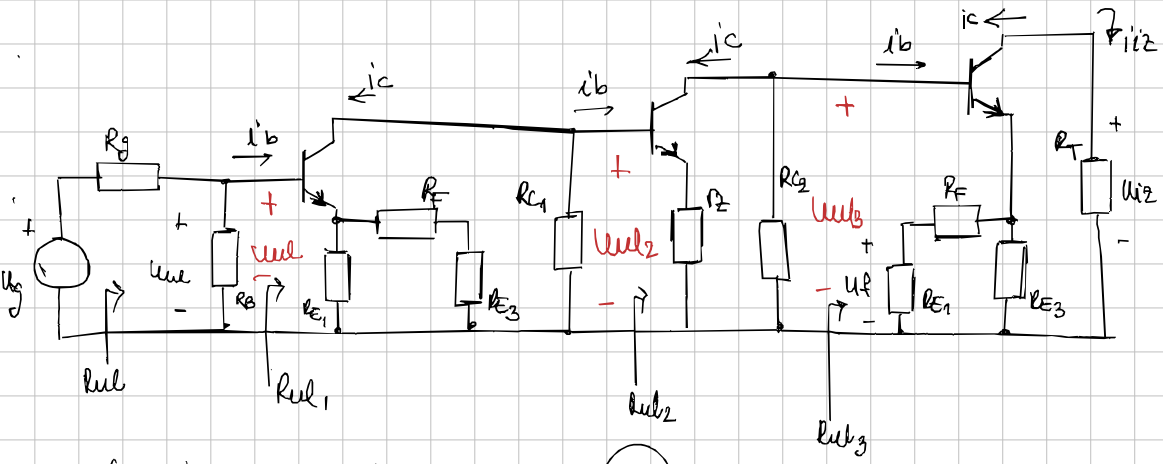

$$G_M = \left(\frac{i_{iz}}{u_a}\right) = \frac{i_{iz}}{u_{ul}} = \frac{i_{iz}}{u_{iz}} \cdot \frac{u_{iz}}{u_{ul}} = \underbrace{\frac{i_{iz}}{u_{iz}}}_{R_T^{-1}} \cdot \underbrace{\frac{u_{iz}}{u_{ul3}}}_{A_{V3}} \cdot \underbrace{\frac{u_{ul3}}{u_{ul2}}}_{A_{V2}} \cdot \underbrace{\frac{u_{ul2}}{u_{ul}}}_{A_{V1}}$$

$$G_M = R_T \cdot A_{V3} \cdot A_{V2} \cdot A_{V1}$$

$$A_{V3} = \frac{u_{iz}}{u_{ul3}} = \frac{-h_{fe} \cdot i_b \cdot R_T}{i_b\left[r_{be_3} + (1+h_{fe})\left((R_F+R_{E1}) \parallel R_{E3}\right)\right]}$$

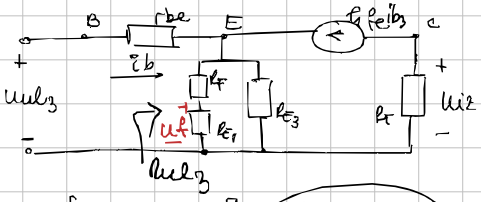

$$\boxed{A_{V3} = -1.01}$$

$$R_{ul3} = r_{be_3} + (1+h_{fe})\left[(R_F+R_{E1}) \parallel R_{E3}\right] = 49.6\,k\Omega$$

$$A_{V2} = \frac{u_{ul3}}{u_{ul2}} = \frac{-h_{fe} \cdot i_b \left(R_{C2} \parallel R_{ul3}\right)}{i_b\left[r_{be_2} + (1+h_{fe}) r_z\right]} \qquad \boxed{A_{V2} = -153.3}$$

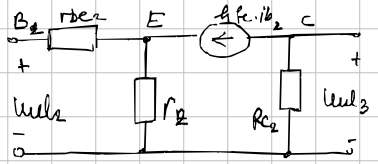

$$R_{ul2} = r_{be_2} + (1+h_{fe}) r_z \longrightarrow R_{ul2} = 2414\,\Omega$$

$$A_{V1} = \frac{u_{ul2}}{u_{ul}} = \frac{-h_{fe}\left(R_{C1} \parallel R_{ul2}\right)}{r_{be_2} + (1+h_{fe})\left[(R_F+R_{E1}) \parallel R_{E3}\right]}$$

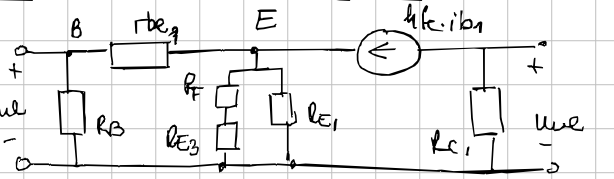

$$\boxed{A_{V1} = -3.4}$$

$$R_{ul1} = 51.2\,k\Omega$$

$$\Rightarrow G_M = R_T \cdot A_{V3} \cdot A_{V2} \cdot A_{V1} \longrightarrow \boxed{G_M = -1053\,\frac{mA}{V}}$$

$$\beta = \frac{U_f}{i_z} \qquad U_f = i_f \cdot R_{E1} \qquad i_f = h_{fe} \cdot i_{b3} \cdot \frac{R_{E3}}{R_{E1} + R_F + R_{E3}} \qquad i_z = -h_{fe} \cdot i_{b3}$$

$$\beta = \frac{-R_{E3} \cdot R_{E1}}{R_{E1} + R_{E3} + R_F} \longrightarrow \boxed{\beta = -11.9} \searrow \frac{1}{\beta} = -0.084$$

ali kada radimo sa $\beta = -11.9 \rightarrow \beta G_M = 12.53 > \phi \Rightarrow$ neg. PPV

$$G_{Mf} \; (A_{vf}) = \frac{G_M}{1 + G_M \cdot \beta} \longrightarrow \boxed{G_{Mf} = -0.078 \cdot \frac{A}{V}} \approx \left(\frac{1}{\beta}\right)$$

$$R_{ul1f} \longrightarrow R_{ul1}(1 + \beta G_M) \qquad G_M = -1.058 \; A/V$$

$$R_{ul1} = 51.2 k\Omega \qquad \Longrightarrow \quad R_{ul1f} = 692.7 k\Omega \longrightarrow R_{ulf} = R_{ulf1} \| R_B$$

$$\boxed{R_{ulf} = 20.8 k\Omega} \approx R_B$$

$$A_{vf} = \frac{u_{iz}}{u_{ul}} = \underbrace{\frac{u_{iz}}{i_{iz}}}_{R_T} \cdot \underbrace{\frac{i_{iz}}{u_{ul}}}_{G_{Mf}} \longrightarrow A_{vf} = R_T \cdot G_{M_F}$$

$$\boxed{A_{vf} = -39} \longrightarrow A_{vf} = -3.9 \; ?$$

$$A_{If} = \frac{i_{iz}}{i_{ul}} = \frac{i_{iz}}{\frac{u_{ul}}{R_{ulf}}} = R_{ulf} \cdot \underbrace{\frac{i_{iz}}{u_{ul}}}_{G_{Mf}} \longrightarrow \boxed{A_{If} = -1622.4} \longrightarrow A_{If} = -162 ?$$

kao da je meni G_{Mf} $\times 10$ veći?

Mislim da je lik fulao negdje

Primjer 6.5)

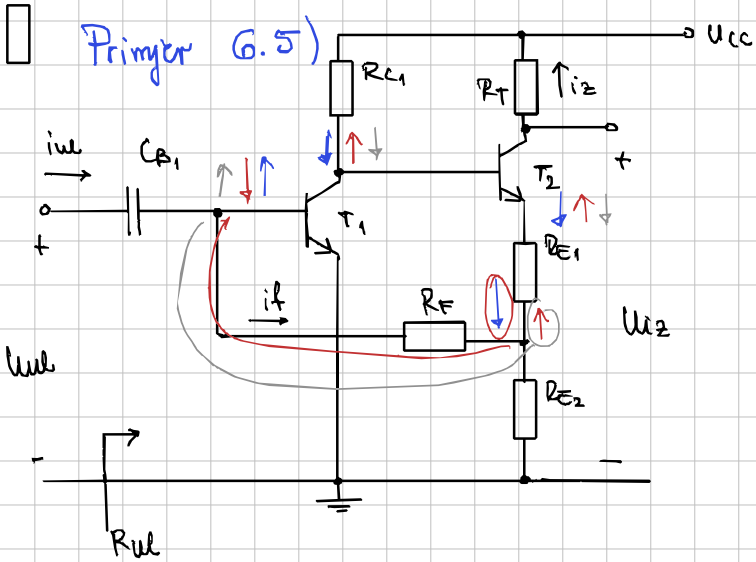

$U_{CC} = 15V$

$R_{C_1} = 6k\Omega$ $R_{E_1} = 1k\Omega$

$R_F = 15k\Omega$ $R_{E_2} = 500\Omega$

$R_T = 2k\Omega$

$\beta \approx h_{fe} = 100$ $U_\gamma = 0.7V$

$U_T = 25mV$

Je li neg PV? → je, otrće se po potrošaču

STATIKA:

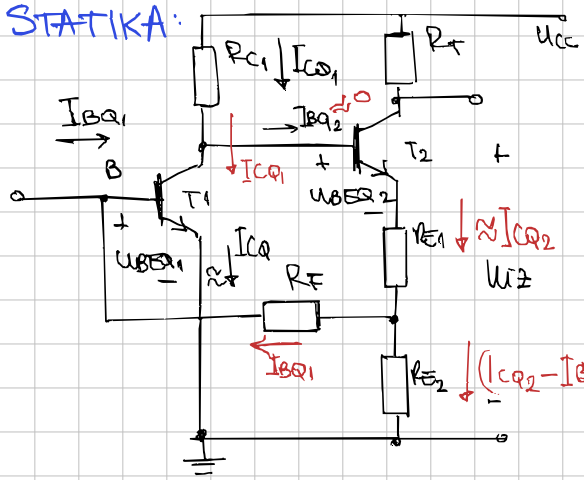

*zanemarimo I_{BQ_2}

$$U_{BEQ_1} - R_F \cdot I_{BQ_1} + R_{E_2}(I_{CQ_2} - I_{BQ_1}) = 0$$

zanemarivo

$$U_{BEQ_1} - R_F \cdot I_{BQ_1} + R_{E_2} \cdot I_{CQ_2} = 0$$

1) $U_{BEQ_1} - R_F \cdot \frac{I_{CQ_1}}{\beta} + R_{E_2} \cdot I_{CQ_2} = 0$

2) $-U_{CC} + R_{C_1} \cdot I_{CQ_1} + U_{BEQ_2} + I_{CQ_2}(R_{E_1} + R_{E_2}) = 0$

---

on iz nekog razloga piše + U_{BEQ_1}, ne znam zašto?

$$-\frac{R_F}{\beta} \cdot I_{CQ_1} + R_{E_2} \cdot I_{CQ_2} = -U_{BEQ_1}$$

$$R_{C_1} \cdot I_{CQ_1} + I_{CQ_2}(R_{E_1} + R_{E_2}) = U_{CC} - U_{BEQ_2}$$

$\Rightarrow$

$\cancel{I_{CQ_1} = 2.078mA}$

$\cancel{I_{CQ_2} = -0.78mA}$

$$\boxed{\begin{array}{lcl} I_{CQ_1} = 1.89mA & & U_{CEQ_1} = 3,66V \\ & \Longrightarrow & \\ I_{CQ_2} = 1.97mA & & U_{CEQ_2} = 8.11V \end{array}}$$

NAP ✓

Dinam. parametri: → $r_{be_1} = 1.32k\Omega$

→ $r_{be_2} = 1.27k\Omega$

DINAMIKA:

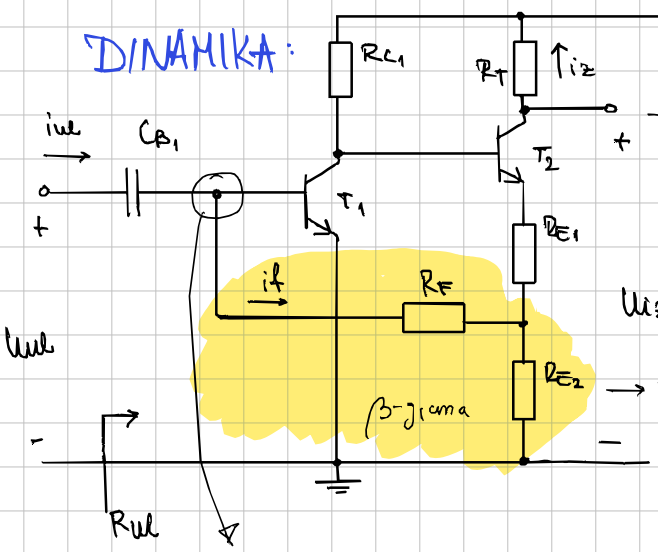

→ spojeno u seriji s potrošačem

→ koristimo kao element na kojem mjerimo struju

STRUJNA VEZA

spojeno na ulaz s iul → paralelno na ulaz → PARALELNA VEZA

pojačalo A-grane s opterećenjem β

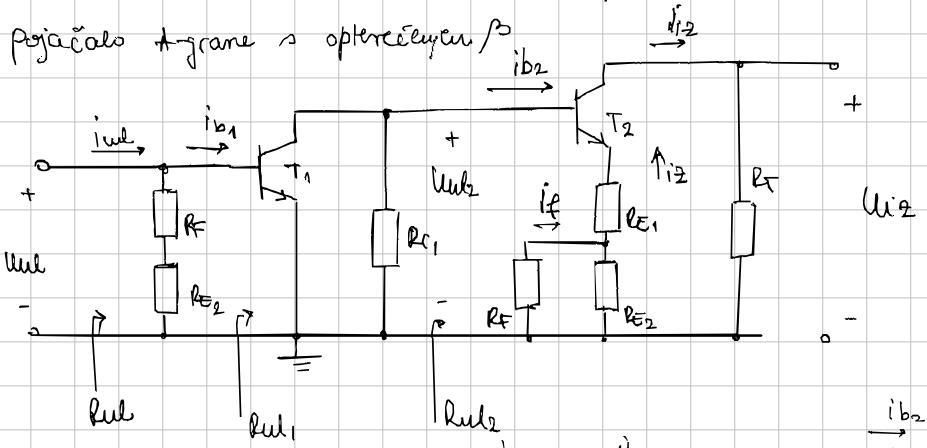

$$A_I = \frac{i_{iz}}{i_{ul}} = \frac{i_{iz}}{i_{b2}} \cdot \frac{i_{b2}}{i_{b1}} \cdot \frac{i_{b1}}{i_{ul}}$$

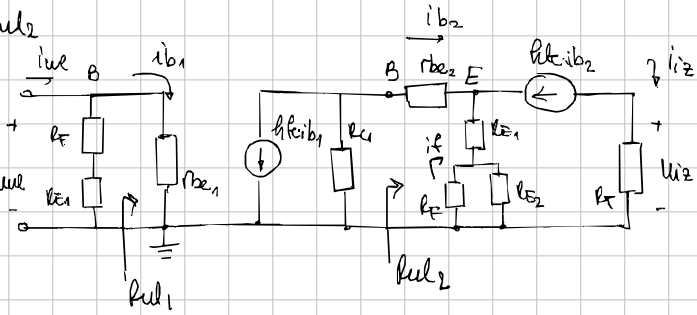

$$\frac{i_{iz}}{i_{b2}} = \frac{-h_{fe} \cdot i_{b2}}{i_{b2}} = -100$$

$$\frac{i_{b2}}{i_{b1}} \qquad i_{b2} = -h_{fe} \cdot i_{b1} \cdot \frac{R_{C1}}{R_{C1} + R_{ul2}}$$

$$R_{ul2} = r_{be2} + (1+h_{fe})(R_{E1} + R_F \| R_{E1})$$

$$R_{ul2} = 151.1\,k\Omega$$

$$\frac{i_{b2}}{i_{b1}} = -3.82 \qquad i_{b1} = i_{ul} \cdot \frac{R_F + R_{E1}}{R_F + R_{E1} + r_{be1}}$$

$$\frac{i_{b1}}{i_{ul}} = 0.92$$

$$\boxed{A_I = 351.44}$$

$$\boxed{\beta = \frac{i_f}{i_{iz}} = \frac{R_{E2}}{R_F + R_{E2}} = \dots = \frac{1}{31}}$$

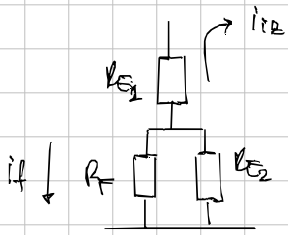

$$i_f = i_{iz} \cdot \frac{R_{E2}}{R_F + R_{E2}}$$

$A_{If} = ? \longrightarrow A_{If} = \dfrac{A_I}{1+\beta A_I} \longrightarrow \boxed{A_{If} = 28.5} \approx \dfrac{1}{\beta}$

$A_I = 351.44$

$A_{vf} = \dfrac{u_{iz}}{u_{ul}}$

$\beta A_I > 0$

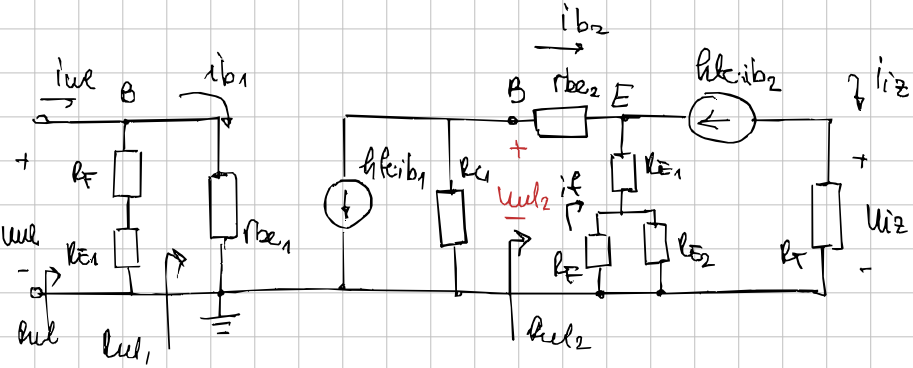

$R_{ul} = R_{ul1} \,||\, (R_F + R_{E2}) = 1219.4\,\Omega \longrightarrow R_{ulf} = \dfrac{R_{ul}}{1+\cancel{\beta A_{If}}}\, A_I$

$\boxed{R_{ulf} = 99.8\,\Omega}$

$A_{vf} = \dfrac{u_{iz}}{u_{ul}} = \dfrac{i_{iz}}{i_{ul}} \cdot \dfrac{R_F}{R_{ulf}} \longrightarrow A_{vf} = 28{,}5 \cdot \dfrac{2\times10^3}{99.8}$

A_{If}

to forchemo banda scalino a f!

$\boxed{A_{vf} = 571.1}$

Primjer 6.6)

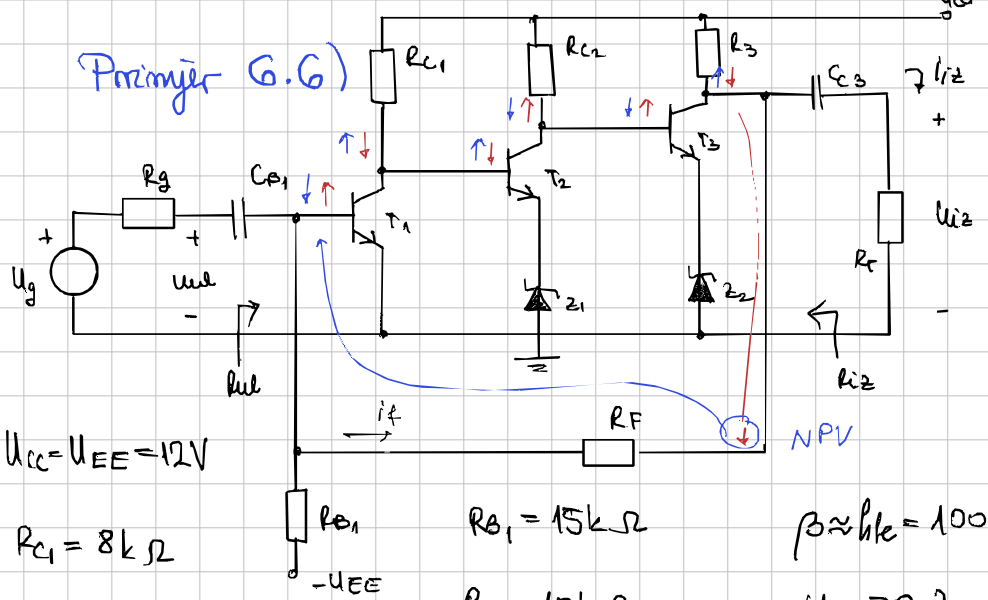

$U_{CC} = U_{EE} = 12V$

$R_{C_1} = 8k\Omega$

$R_{C_2} = 3k\Omega$

$R_{C_3} = 1k\Omega$

$R_{B_1} = 15k\Omega$

$R_F = 10k\Omega$

$R_T = 10k\Omega$

$\beta \approx h_{fe} = 100$

$U_\gamma = 0.7$

$U_{Z_1} = 3V$ $U_{Z_2} = 6V$

$r_Z = 10\Omega$

R_F spojen na izlazni čvor tj. točno na izlazni napon → NAPONSKA

?! paralelno? spojena $\overset{+}{u_{ul}}$ → PARALELNA

STATIKA

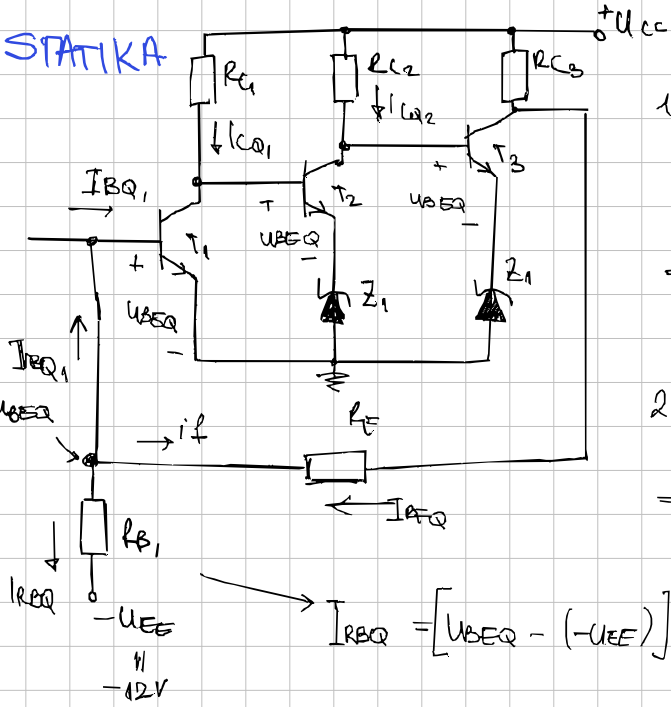

1) $-U_{CC} + I_{CQ_1} \cdot R_{C_1} + U_{BEQ} + U_{Z_1} = 0$

$$I_{CQ_1} = \frac{U_{CC} - U_{BEQ} - U_{Z_1}}{R_{C_1}}$$

$\Rightarrow \boxed{I_{CQ_1} = 1.04\,mA}$

2) $-U_{CC} + I_{CQ_2} \cdot R_{C_2} + U_{BEQ} + U_{Z_2} = 0$

$\Rightarrow \boxed{I_{CQ_2} = 1.77\,mA}$

$$I_{RBQ} = \left[U_{BEQ} - (-U_{EE})\right] \cdot \frac{1}{R_{B_1}} \rightarrow I_{RBQ} = 0.85\,mA$$

$$I_{RFQ} = I_{BQ_1} + I_{RBQ} = \frac{I_{CQ_1}}{\beta} + I_{RBQ} \rightarrow I_{RFQ} = 0.86\,mA$$

$$-U_{CC} + I_{CQ_3} \cdot R_{C_3} + I_{RFQ} \cdot R_F + U_{BEQ} = 0$$

$$I_{CQ_3} = \frac{U_{CC} - U_{BEQ} - I_{RFQ} \cdot R_F}{R_{C_3}} \rightarrow I_{CQ_3} = 2.7\,mA$$

$U_{CEQ_3} = 3.3V$ $U_{CEQ_2} = 3.69V$ $U_{CEQ_1} = 3.67V$

→ $r_{be_3} = 925.9\Omega$ $r_{be_2} = 1412.4\Omega$ $r_{be_1} = 2403.8\Omega$

NAPONSKA - PARALELNA

DINAMIKA

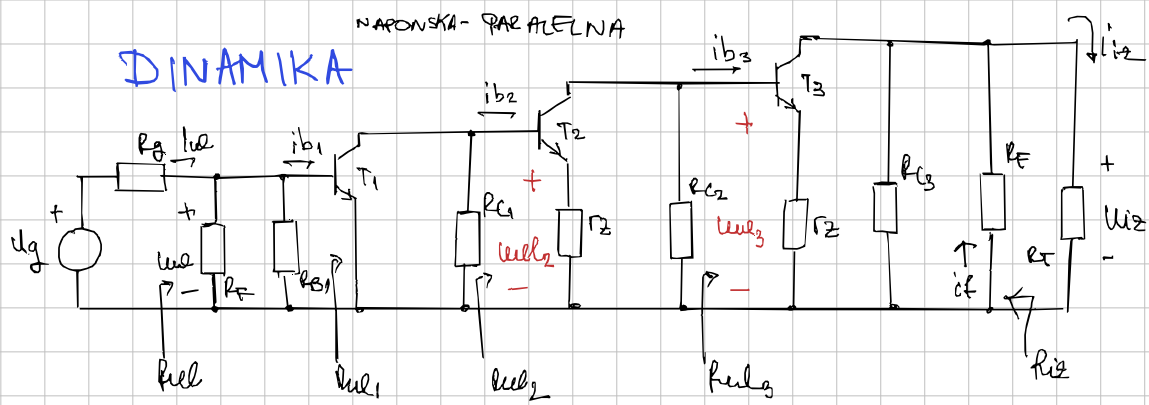

$$R_M = \frac{u_{iz}}{i_{ul}} = \underbrace{\frac{u_{iz}}{u_{ul3}}}_{A_{v3}} \cdot \underbrace{\frac{u_{ul3}}{u_{ul2}}}_{A_{v2}} \cdot \underbrace{\frac{u_{ul2}}{u_{ul}}}_{A_{v1}} \cdot \underbrace{\frac{u_{ul}}{i_{ul}}}_{R_{ul}}$$

$$A_{v3} = \frac{u_{iz}}{u_{ul3}} = \frac{-h_{fe} \cdot \cancel{i_{b3}} \cdot (R_{c3} \| R_F \| R_T)}{\cancel{i_{b3}} (r_{be3} + (1+h_{fe}) \cdot r_z)}$$

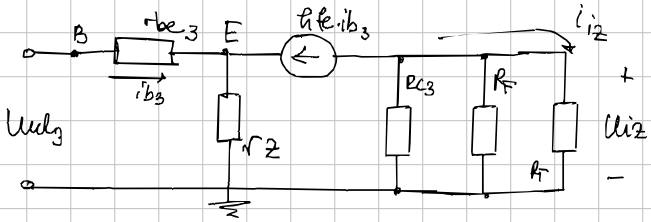

$$A_{v3} = -43.05$$

$$R_{ul3} = r_{be3} + (1+h_{fe}) r_z \longrightarrow R_{ul3} = 1935.9\ \Omega$$

$$A_{v2} = \frac{u_{ul3}}{u_{ul2}} = \frac{-h_{fe} \cdot \cancel{i_{b2}} \cdot (R_{c2} \| R_{ul3})}{\cancel{i_{b2}} (r_{be2} + (1+h_{fe}) \cdot r_z)}$$

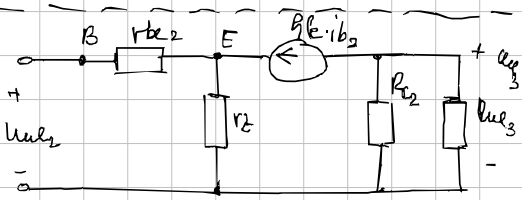

$$A_{v2} = -48.6$$

$$R_{ul2} = r_{be2} + (1+h_{fe}) r_z \longrightarrow R_{ul2} = 2422.4\ \Omega$$

$$A_{v1} = \frac{u_{ul2}}{u_{ul}} = \frac{-h_{fe} \cdot \cancel{i_{b1}} \cdot (R_{c1} \| R_{ul2})}{r_{be1} \cdot \cancel{i_{b1}}}$$

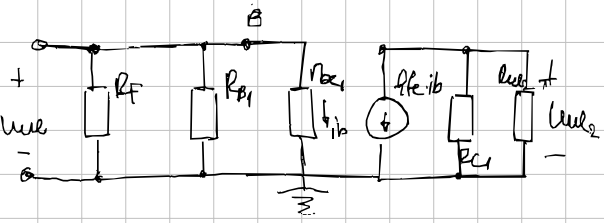

$$A_{v1} = -77.4$$

$$R_{ul1} = r_{be1} = 2403.8\ \Omega$$

$$R_{ul} = R_{ul1} \| R_F \| R_B \longrightarrow R_{ul} = 1716.2\ \Omega$$

$$\Rightarrow R_M = A_{v3} \cdot A_{v2} \cdot A_{v1} \cdot R_{ul} \Longrightarrow \boxed{R_M = -277.9 \times 10^6\ \frac{V}{A}}$$

$$\beta = \frac{i_f}{u_{iz}} = \frac{\cancel{i_f}}{-R_F \cdot \cancel{i_f}} = \frac{-1}{R_F}$$

$$\beta = 10^{-4}\,\frac{A}{V} \longrightarrow \beta R_M = -27.8\times10^{3}$$

$$\Rightarrow R_{Mf} = \frac{R_M}{1+\beta R_M}$$

$$\boxed{R_{Mf} = 9.997\times10^{3}} \approx \frac{1}{\beta}$$

$$R_{ulf} = \frac{R_{ul}}{1+\beta R_M} \longrightarrow \boxed{R_{ulf} = 61.7\ m\Omega}$$

$$R_{izf} = \frac{R_{iz}}{1+\beta R_m} = \frac{(R_{C3} \parallel R_F)}{1+\beta R_m} \left(\left| R_T = \infty \right| \right) \Rightarrow R_m = -279\times10^{3}\,\frac{V}{mA} \longrightarrow \boxed{R_{izf} = 33\ m\Omega}$$

$$A_{vf} = \frac{u_{iz}}{u_{ul}} = \frac{u_{iz}}{u_{ul3}} \cdot \frac{u_{ul3}}{u_{ul2}} \cdot \frac{u_{ul2}}{u_{ul}} = A_{v3} \cdot A_{v2} \cdot A_{v1} \longrightarrow \boxed{A_{vf} = -161.9\times10^{3}}$$

$$A_{If} = \frac{i_{iz}}{i_{ul}} = \frac{i_{iz}}{i_{b3}} \cdot \frac{i_{b3}}{i_{b2}} \cdot \frac{i_{b2}}{i_{b1}} \cdot \frac{i_{b1}}{i_{ul}}$$

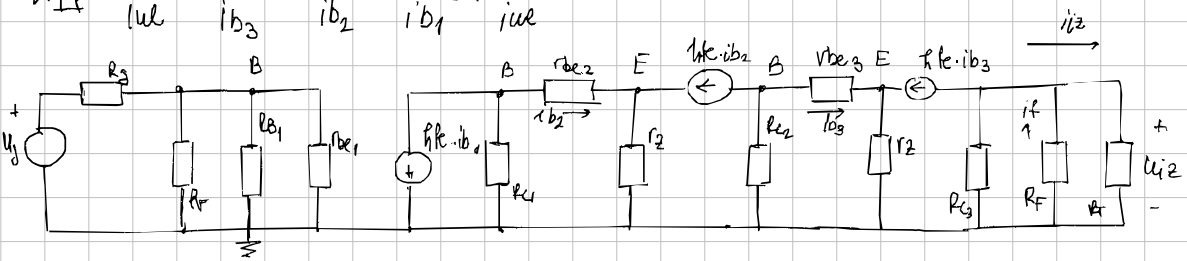

$$A_{If} = \frac{i_{iz}}{i_{ul}} = \frac{u_{iz}}{R_T} \cdot \frac{1}{i_{ul}} = \frac{1}{R_T} \cdot R_{Mf} = 1\,?$$

Oni su dobili -3.33?